D

1 Here is a net of a cuboid.
Work out the surface area of the cuboid.

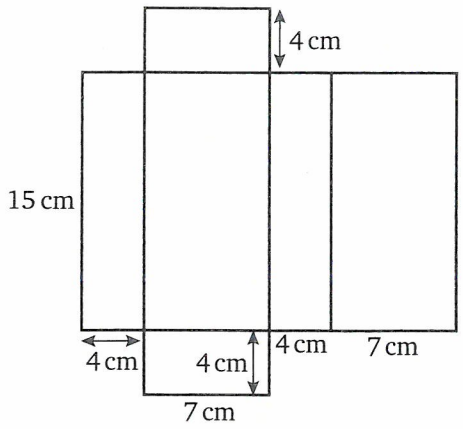

2 Here is a net of a triangular prism.
Work out the surface area.
Give your answer in:

a m^2 **b** cm^2

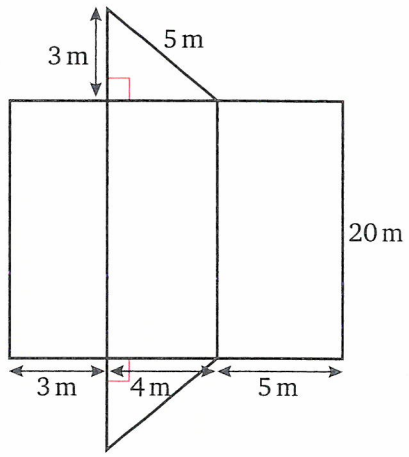

C

3 Calculate the total surface area of cubes with these side lengths.

a 7 cm **b** 10 cm **c** 5.4 cm

C

4 **a** Calculate the total surface area of these cuboids.

i

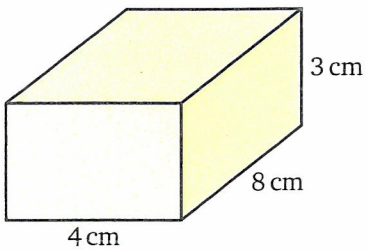

ii

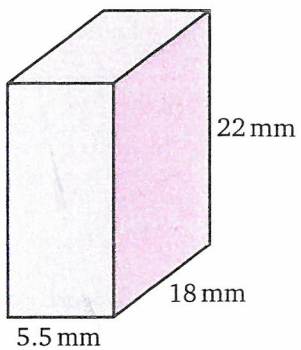

b Calculate the total surface area of these triangular prisms.

i

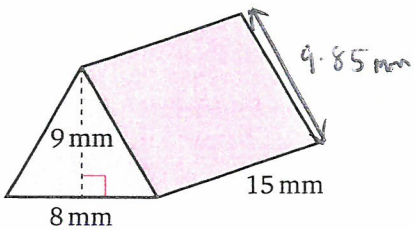

ii

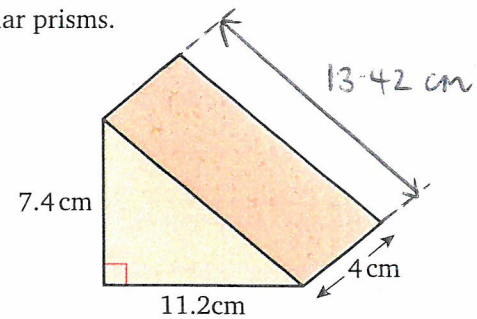

Bump up your grade

For a Grade C make sure you know how to work out the surface area of a solid.

5 Which of these units are correct for the surface area of a solid?

mm^2 cm^3 m^2 mm km^2 cm^2

6 Calculate the area of the curved surface of each of these cylinders.

a

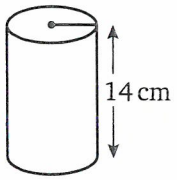

b

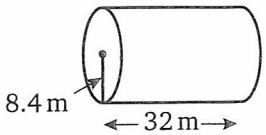

c

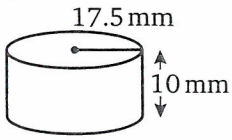

7 Jack says that the formula for the surface area of a cuboid is length × width × height.

Is he correct?

Give a reason for your answer.

8 Here are two closed cylinders. (They have a top and a base.)

Calculate the total surface area of each cylinder.

a

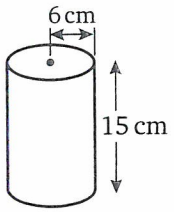

b

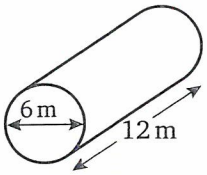

9 Andrew makes wooden jewellery boxes in the shape of cuboids of length 20 cm, width 15 cm and depth 10 cm. Each box has a lid.

The wood costs £18.75 for 1 square metre and on average he wastes 10% of each square metre.

He varnishes the outside of each box when he has made them.

A tin of varnish will cover an area of 1.5 m^2 and costs £7.99.

What is the cost of making each jewellery box?

Hint

Draw a diagram to help you.